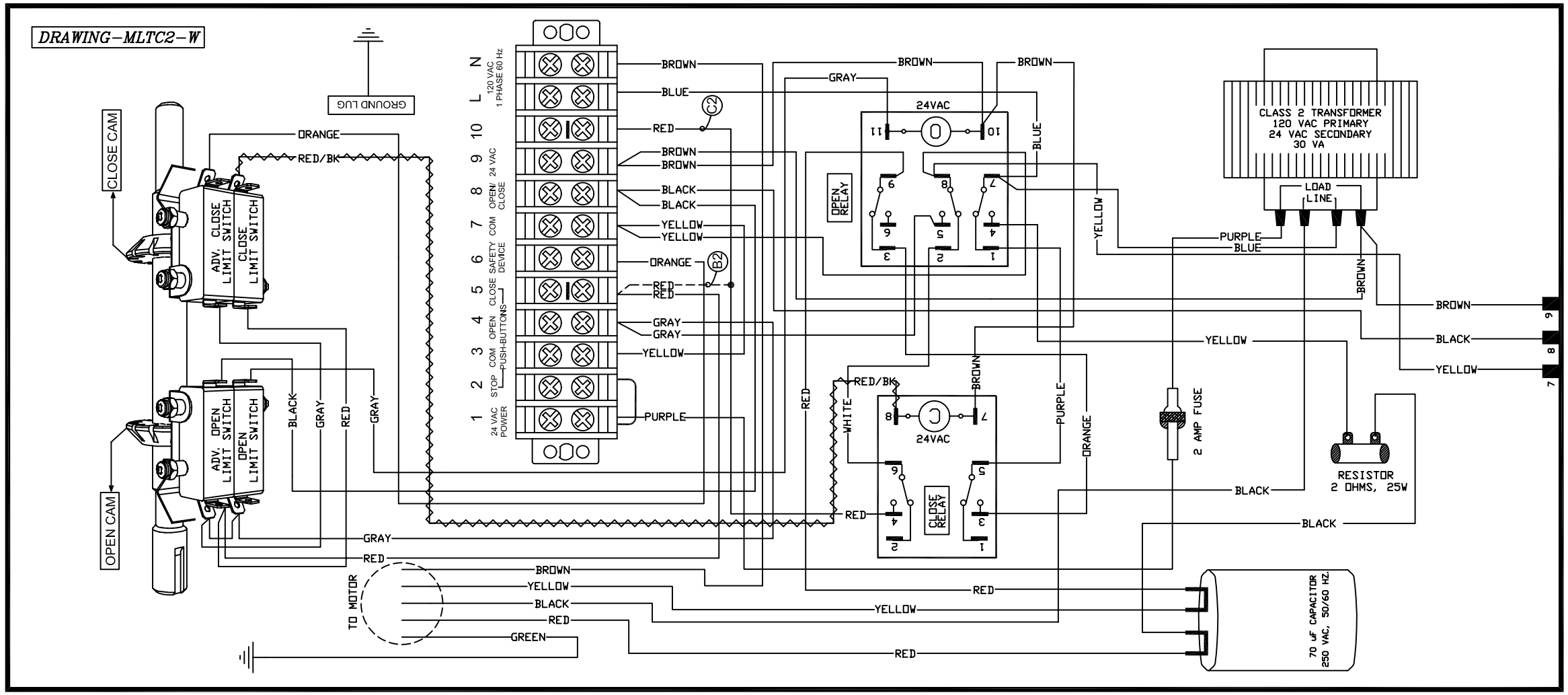

EXTERNAL WIRING

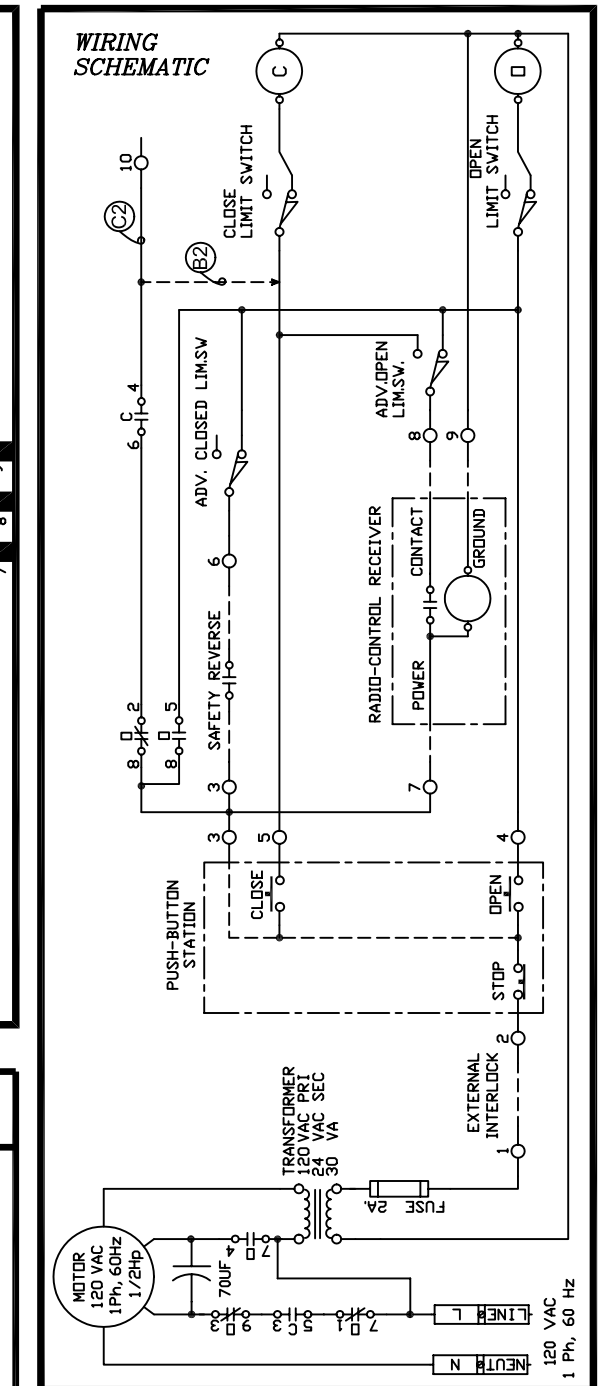

LINE POWER	24 VAC POWER	EXTERNAL INTERLOCK	SAFETY REVERSE	OPEN/CLOSE COMMAND	SINGLE PUSH-BUTTON STATION	TWO PUSH-BUTTON STATION	RADIO RECEIVER
L N	1 9	1 2	3 6	7 8	2 3 4 5	2 3 4 5	7 8 9
POWER SUPPLY 120 VAC 1 Ph, 60 Hz.	24 VAC POWER AVAILABLE 10VA MAX.	FACTORY INSTALLED JUMPER. REMOVE IF EXT. INTERLOCK IS USED.	CONTACT FOR SAFETY DEVICE	CONTACT FOR OPEN/ OPEN DOOR DEVICE.	OPEN CLOSE STOP	OPEN CLOSE STOP / OPEN CLOSE STOP	PURPLE BLUE BROWN POWER CONTACT GROUND RC

NOTE- PLACE A JUMPER BETWEEN TERMINAL 2 AND TERMINAL 3. IF STOP-BUTTON IS NOT USED.

ATTENTION- USE 18AWG OR HIGHER FOR WIRING ALL EXTERNAL CONNECTIONS

NOTE- C2 / B2

C2 ⇨ B2 REMOVE THE RED WIRE WITH RAPID CONNECTOR FROM TERMINAL#10 AND TRANSFER IT TO TERMINAL # 5.

B2 ⇨ C2 REMOVE THE RED WIRE WITH RAPID CONNECTOR FROM TERMINAL#5 AND TRANSFER IT TO TERMINAL # 10.

WARNING: MOTORISED DOORS CAN CAUSE SERIOUS INJURIES OR DEATH. MANARAS STRONGLY RECOMMENDS THE USE OF ENTRAPMENT PROTECTION SYSTEMS, ESPECIALLY IN THE CASE OF MOMENTARY CONTACT TO CLOSE AS IN B2 WIRING.

PROJECT

TITLE *WIRING DIAGRAM FOR LIGHT DUTY OPERATOR MODEL-MLT*

CLIENT

ENGINEER

DISTRIBUTOR

MANUFACTURER *MANARAS AUTO DOORS*

DATE	DES.	VER.	AUTOCAD FILE	DRAWING NO.	REV.
09. JULY. 2007	BP		MLTC2RES-W		D